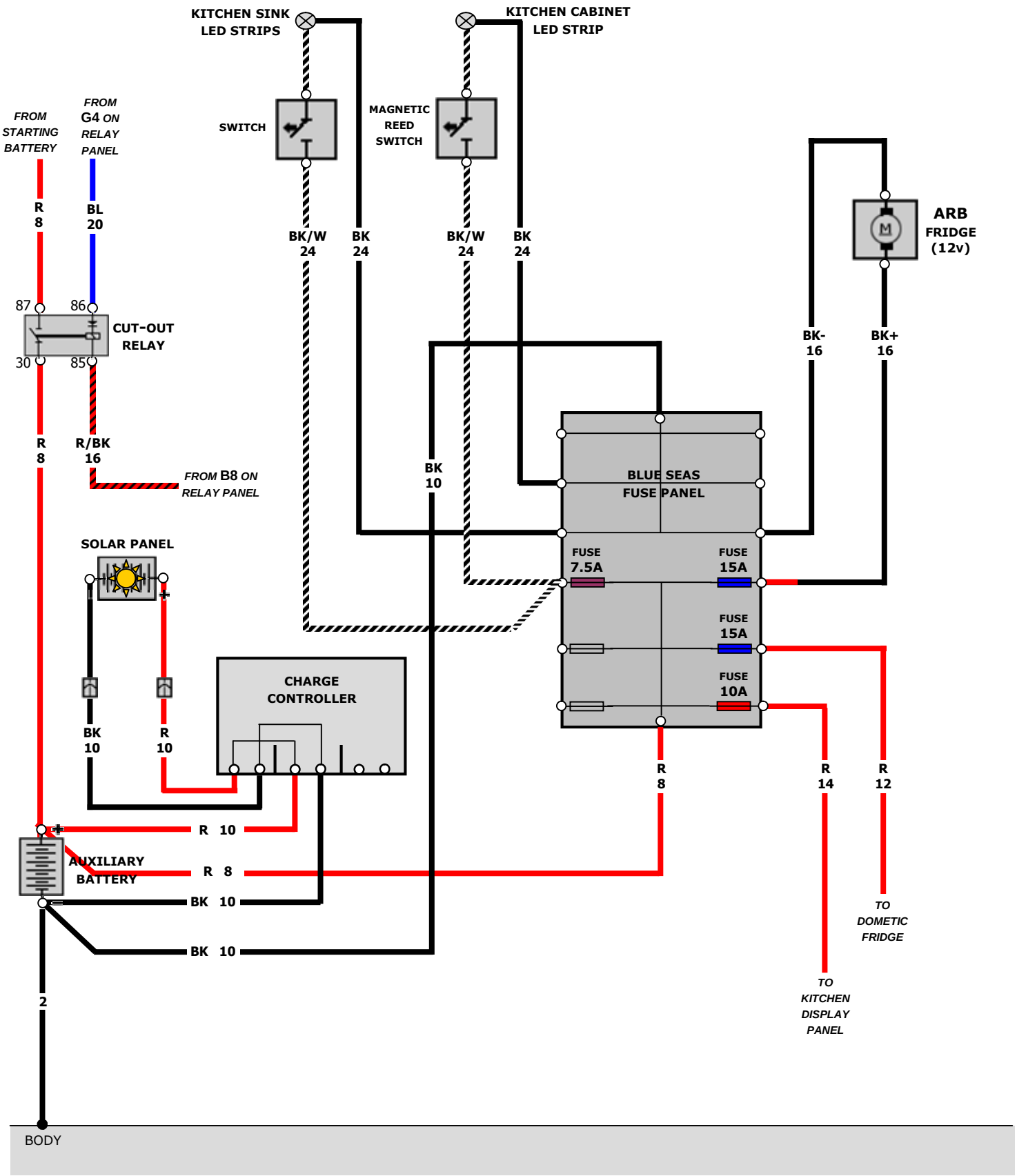

© 2014 KamzKreationz

Auxiliary & Solar Systems / ARB Fridge